IdealSpray

Ideal Standard

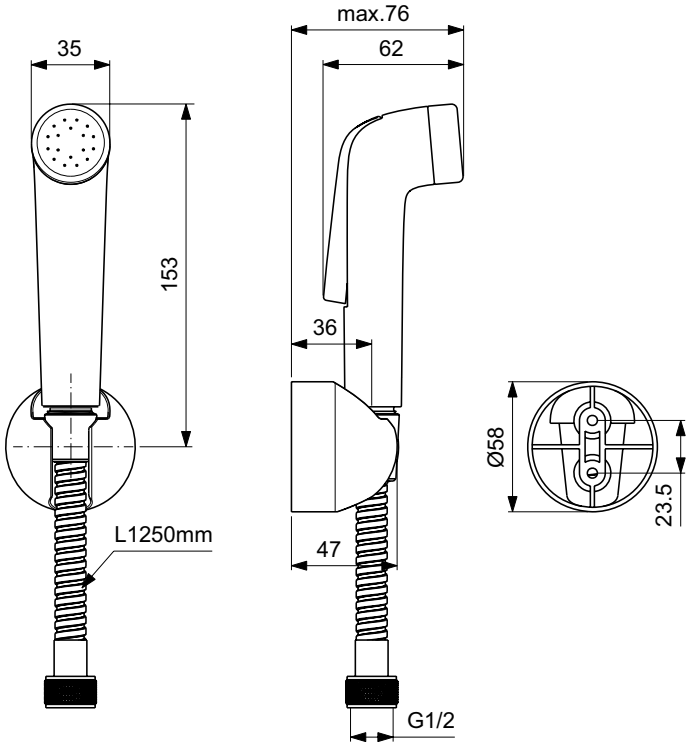

Article-No.: **B0924AC**

Trigger Spray shower set

Trigger control handle with locking position. Maximum flow rate 4 lt/min. With plastic fixed wall bracket and 1250 mm double clenched hose.

Colour: AC - White

More product details:

Style:	Contemporary
Net Weight (kg):	0,35
Material:	Mixed material

Ideal Standard Gulf FZCO - United Arab Emirates
Tel: +971 4 804 2400 - Email: idealstandardgulf@idealstandard.com - Web: www.idealstandardgulf.com