Ideal Standard

Taps & mixers;Washbasins

Ceraline

Ideal Standard

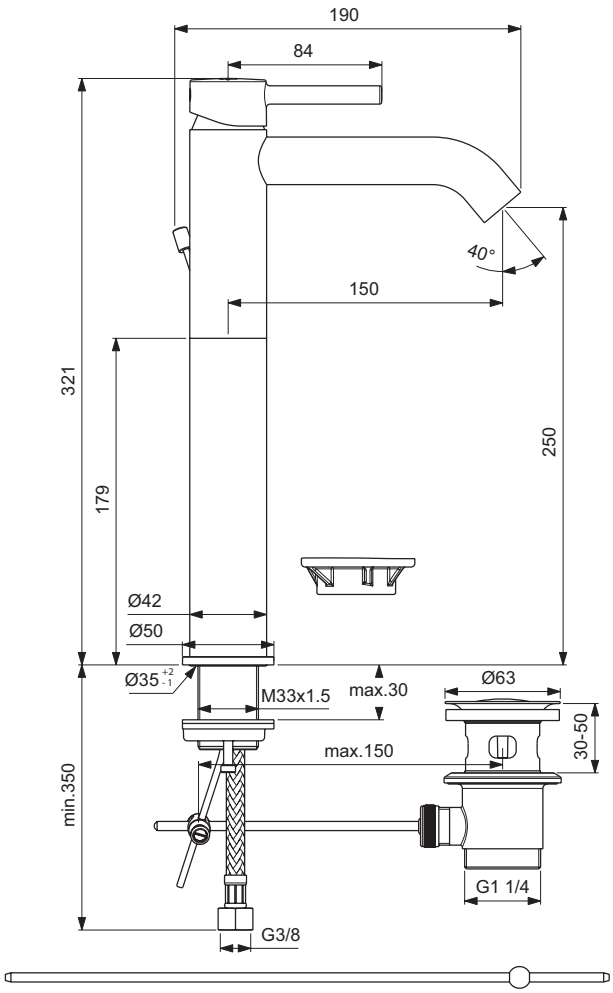

Article-No.: **BC194AA**

Vessel mixer

Ceraline vessel mixer with maximum 5lt/min flow rate, 35 mm ceramic disc cartridge, hot water limiter, flexible hoses G3/8", Easy-fix, cache aerator M21,5x1, metal pop-up waste, pop-up rod, chrome.

Colour: AA - Chrome

Features:
· Water saving
· Click technology
· Easy Fix

More product details:

Type:	Basin mixer
Mounting:	Deck mounted
Operation Type:	Single lever
Accreditations:	DIN EN 817;DIN 4109 Gruppe 1
Operation Pressure (bar):	3
Flow Rate (litre):	5
Tap Holes:	1
Net Weight (kg):	1.799
Material:	Chrome
Height (mm):	321
Width (mm):	50
Depth (mm):	189
Shape:	Rectangular

Ideal Standard Gulf FZCO - United Arab Emirates
Jafza View Building, P.O. Box 261559, Jebel Ali Free Zone, Dubai, United Arab Emirates - Tel: +971 4 804 2400
Email: idealstandardgulf@idealstandard.com - Web: www.idealstandardgulf.com