SILK BLACK

DARE TO BE DIFFERENT

Ideal Standard

Design is in our DNA.

And we believe it is in yours too.
Let your personal taste and your sense of
style speak out with our new silk black finish.
Black embodies sophistication
and elevates any room in an instant,
whether you aim to fully transform
your space with a bold design
or create visual contrast by adding
only a touch of black.
Our wide choice of products – from
basins, toilets and furniture to shower trays,
enclosures and accessories – will
offer you seemingly endless opportunities
for self-expression.

Be your own trendsetter.

Dare to be different.

Ideal Standard

Bringing your creative vision to life.

IDEAL STANDARD OFFERS COMPLETE BATHROOM SOLUTIONS. FROM MIXERS, TAPS AND SHOWER SYSTEMS TO BASINS, TOILETS AND BATHROOM FURNITURE. BEAUTIFULLY DESIGNED. CAREFULLY COORDINATED. AND PRODUCED TO THE HIGHEST QUALITY STANDARDS.

ideal Standard

Ideal Standard

Inspiration 8

Mixers & Taps 20
- Ceraline 22
- Cerafine O & Tonic II 30

Basins, Toilets and Furniture 38
- Tesi 40
- Connect Air 42
- IOM Accessories 48
- Basin Wastes 50
- Flush Plates 51

Showering 52
- Ceratherm T & Idealrain Showers 54
- Ultra Flat New Shower Trays 70
- Connect 2 Shower Enclosures 74

Kitchen Taps 82
- Ceralook 84
- Cerafine O 84

OUR SELECTION

Cerafine O Grande Basin Mixer - BD131XG
Tesi Vanity 80cm - T3509V3
Tesi Basin Unit 80cm - T0051ZT
Mirror with Sensor Light & Anti-Steam 80cm - T3347BH
Tesi Wall-Hung Toilet AquaBlade T0079V3
Tesi Wall-Hung Bidet - T3552V3
Cerafine O Bidet Mixer - BC705XG
Altes Flush Plate - Black Ceramic - R0130A6
IOM Towel Rail 45cm - A9117XG

Leave the ordinary behind with an all-black bathroom design

TO CREATE AN INTIMATE, ELEGANT AND SMART ATMOSPHERE, CHOOSE THE ALL-BLACK INTERIOR DESIGN APPROACH.

We have carefully selected some of the most popular models from our portfolio and are now offering them in silk black.

BLACK NEVER GOES OUT OF FASHION.

The dark hue is an elegant choice that will bring effortless style and sophistication to your bathroom design.

OUR SILK BLACK COLLECTIONS ARE NOT ONLY A STYLE STATEMENT, THEY ARE ALSO INTELLIGENTLY DESIGNED TO MEET OUR CUSTOMERS' EVERYDAY NEEDS.

The products are fitted with Ideal Standard's most innovative technologies such as the FirmaFlow® ceramics disc cartridge and AquaBlade® flush technology.

OUR SELECTION

Ceraline Vessel Mixer - BC194XG
Strada II Round Vessel 45cm - T295901
Adapto Console 120cm - Light Wood - U8409FF
Adapto Storage Unit x 2 50cm - Light Wood - U8421FF
Contemporary Bottle Trap - T4441XG
Mirror with Ambient Light 120cm - T3338BH
Strada II Wall-Hung Toilet AquaBlade - T299701
Strada II Seat and Cover - Soft Close - T360101
Altes Flush Plate - White Ceramic - R0130AC
Strada II Wall-Hung Bidet - T297101
Ceraline Bidet Mixer - BC197XG
Dea Freestanding Bath Tub 190cm - E306801
Tonic II Freestanding Bath & Shower Mixer - A6347XG

Combine silk black with soft white for a graphic modern interior.

MIX AND MATCH OUR SILK BLACK PRODUCTS WITH IDEAL STANDARD'S WELL-KNOWN WHITE CERAMIC COLLECTIONS TO CREATE A CONTEMPORARY AND HARMONIOUS LOOK.

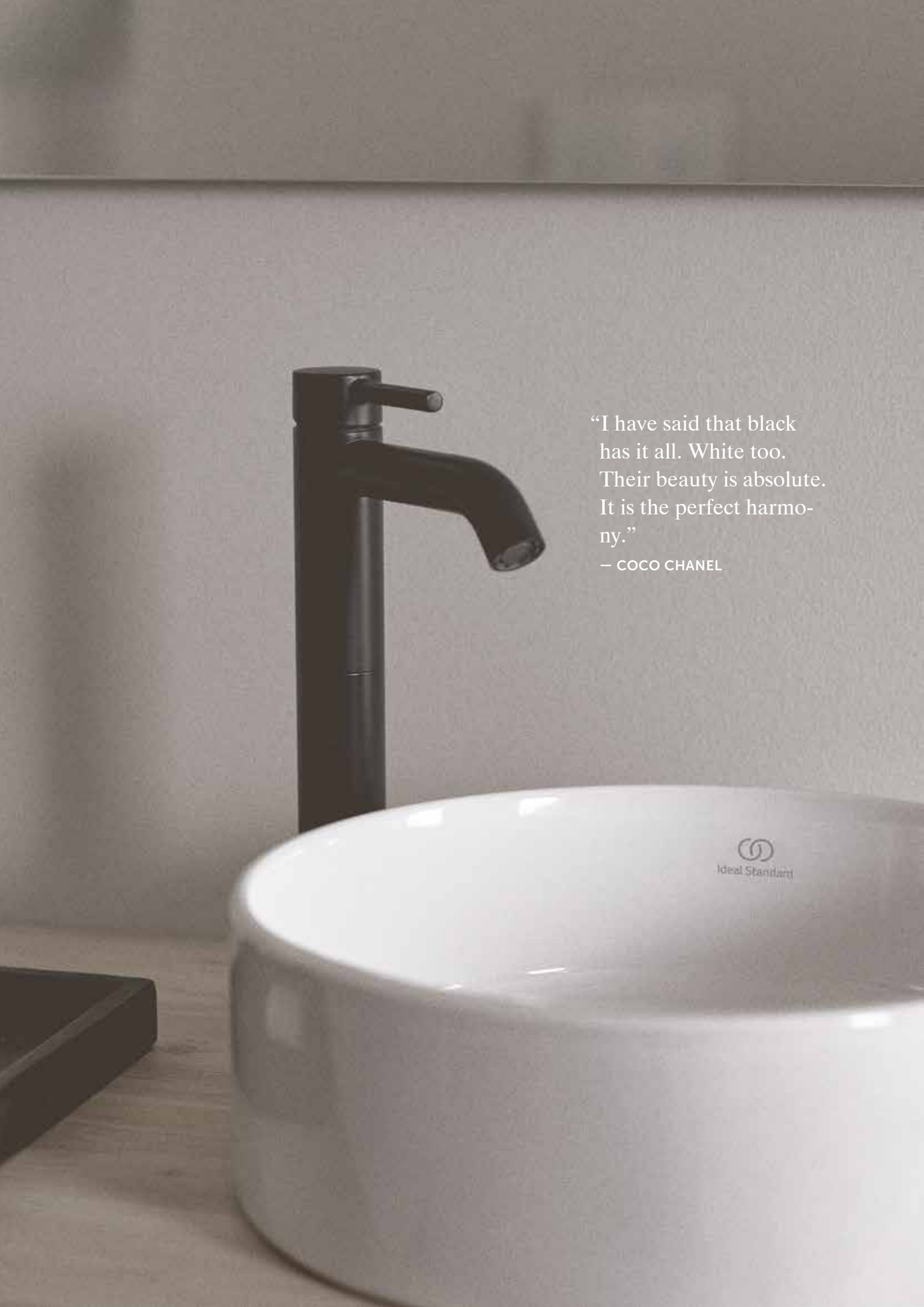

"I have said that black has it all. White too. Their beauty is absolute. It is the perfect harmony."

– COCO CHANEL

OUR SELECTION

Cerafine O Built-in Basin Mixer - BD133XG
Strada II Rectangular Vessel 60x40cm - T299901
Adapto Console 120cm - Light Wood - U8409FF
Adapto Storage Unit x 2 50cm - Light Wood - U8421FF
Contemporary Bottle Trap - T4441XG
Mirror with Ambient Light 120cm - T3338BH

Mixers and taps

THE BATHROOM IS SUCH AN IMPORTANT PART OF THE HOUSE – A PLACE TO RELAX, TO PREPARE FOR THE DAY. WITH A CHOICE ACROSS DIFFERENT RANGES, YOU CAN CREATE A SPACE THAT ACHIEVES EVERYTHING YOU NEED.

Ceraline Vessel Mixer - BC269XG
Strada II Round Vessel 45cm - T295901

Ceraline

CLEAN LINES AND GENTLE ARCS COATED IN SILKY BLACK

With soft geometries and an organic, cylindrical shape Ceraline offers a timeless design. Drawing inspiration from Scandinavian styling, it's going to bring simple, minimalist beauty to your space. The silk black finish makes this a bolder choice, but combined with natural materials and softer hues you achieve a perfect balance. Designed for everyday living, the higher spout brings comfort and convenience.

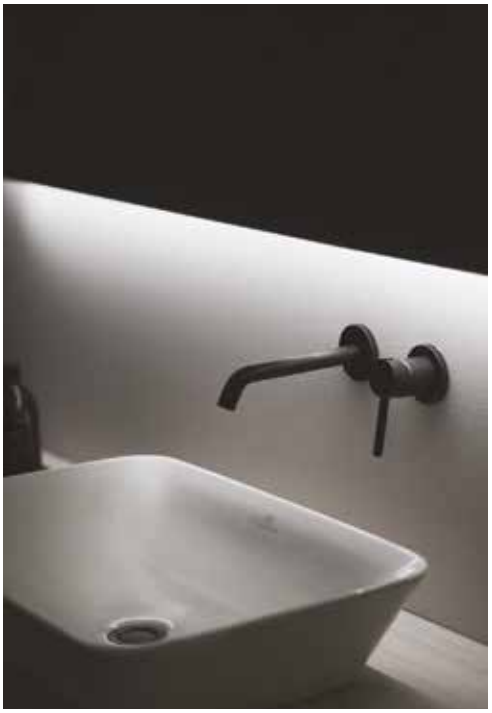

Ceraline Bidet Mixer - BC197XG
Ceraline Built-in Basin Mixer - A6938XG

OUR SELECTION

Ceraline Built-in Basin Mixer - A6938XG
Connect Air Rectangular Vessel 60x40cm - E034801
Adapto Console 120cm - Light Wood - U8409FF
Adapto Storage Unit x 2 50cm - Light Wood - U8421FF
Contemporary Bottle Trap - T4441XG
Mirror with Ambient Light 120cm - T3338BH

Basin mixer

Built-in basin mixer

Vessel mixer

Bidet mixer

Exposed shower mixer

Exposed bath & shower mixer

Exposed bath & shower mixer with accessories

Built-in shower mixer

Built-in bath & shower mixer

Cerafine O Built-in Basin Mixer - BD133XG
Strada II Rectangular Vessel 60x40cm -
T299901

Cerafine O & Tonic II

A STRONG DESIGN SOFTENED BY ROUNDED SHAPES

For those looking to add a touch of extravagance to their project, Cerafine O is the collection that is sure to make a statement in your home. Combined with crisp white ceramics or with all black ones, the silk black taps and mixers will stand out for all the right reasons.

Cerafine O Side Handle Grande Basin Mixer - BC703XG
Cerafine O Bidet Mixer - BC705XG

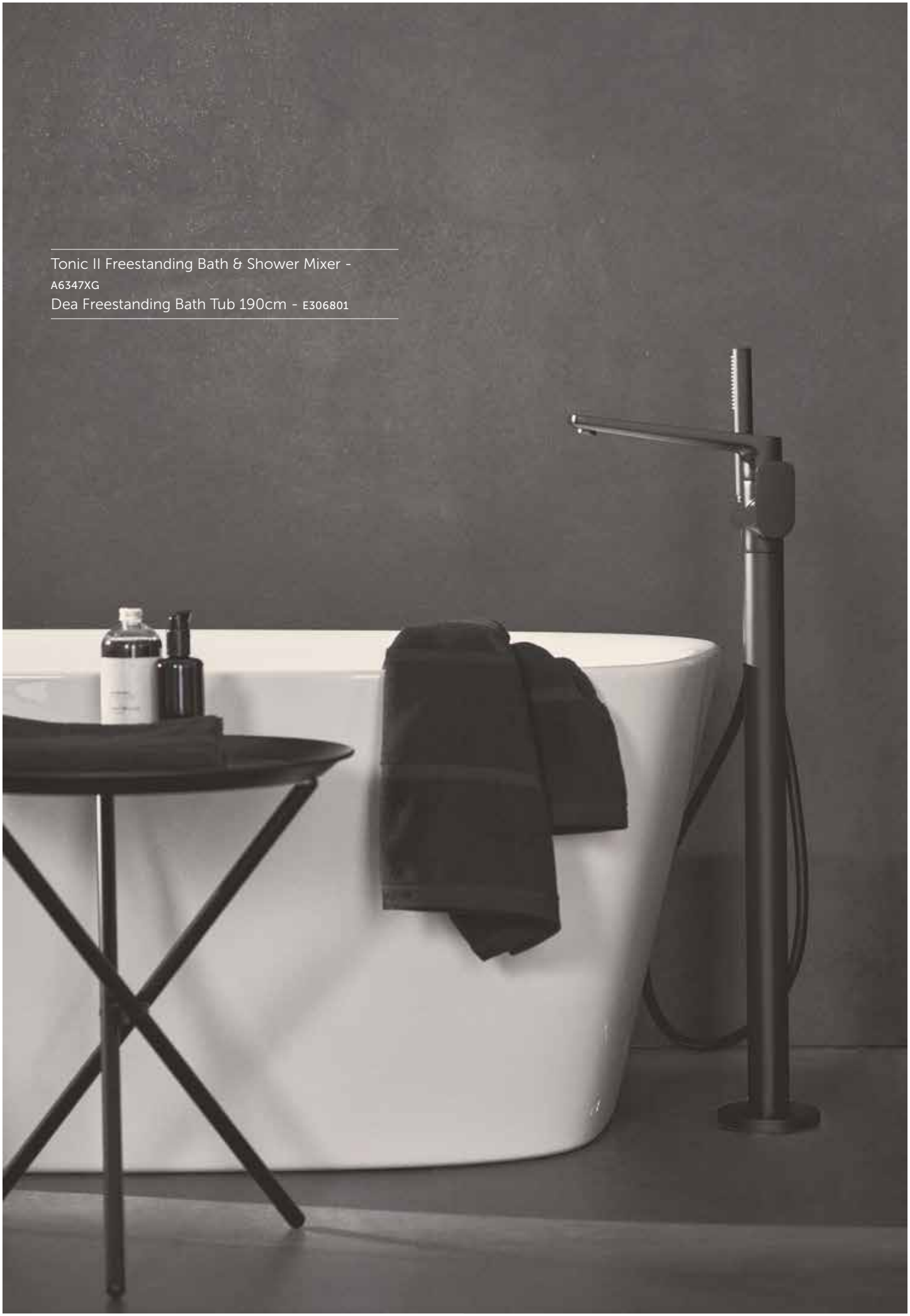

Tonic II Freestanding Bath & Shower Mixer - A6347XG
Dea Freestanding Bath Tub 190cm - E306801

Grande basin mixer

Side handle grande basin mixer

Built-in basin mixer

Bidet mixer

Freestanding bath & shower mixer

Built-in shower mixer

Built-in bath & shower mixer

Exposed shower mixer

Exposed bath & shower mixer

Exposed bath & shower mixer with accessories

FirmaFlow®

HIDDEN BRILLIANCE SINCE 1969

We pioneered the ceramic disc cartridge in 1969 and this innovation redefined
the way people used bathrooms and made it possible to create the single lever tap. As the ultimate development of the original ceramic disk cartridge, some 50 years on, FirmaFlow® is undisputed market leader with its innovative engineering and extraordinary powers of durability, comfort and control are achieved for twice as long as the industry standard.

ECOFLOW REGULATOR

WATER IS A PRECIOUS RESOURCE. SAVE WATER WITH ECOFLOW.

Our Eco Flow regulator reduces the water consumption down to 5L/min, without compromising on comfort.

EASYFIX INSTALLATION

EASY AND FAST
TO INSTALL.

EasyFix makes installation simple with its reliability reducing maintenance and cutting installation time by 30%.

LIGHTMOVE

SUPERIOR PINPOINT PRECISION OVER WATER TEMPERATURE.

The FirmaFlow cartridge enables finer temperature adjustments between 34°C and 42°C. Precision is paramount with LightMove®, improving tap handle usability, whilst the in-built hot water limiter makes scalding a thing of the past.

BASIN MIXER

MODEL	SKU
Metal pop-up waste	BC203XG

- EasyFix® system
- Hidden aerator 5l/min
- FirmaFlow® ceramic disc cartridge 28mm
- Temperature limiter
- Supplied with flexible hoses G3/8 PEX
- Comfort area: Height 76mm

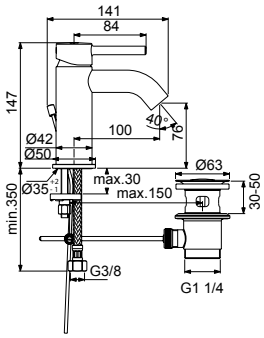

VESSEL BASIN MIXER

MODEL	SKU
Metal pop-up waste	BC194XG

- EasyFix® system
- Hidden aerator 5l/min
- FirmaFlow® ceramic disc cartridge 28mm
- Temperature limiter
- With shaft screw connection
- Supplied with flexible hoses G3/8 PEX
- Comfort area: Height 250mm

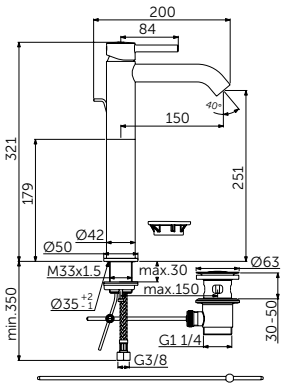

BUILT-IN BASIN MIXER KIT2

MODEL	SKU
Tubular spout 190mm	A6938XG

- Hidden aerator
- Kit 1 to be purchased separately (A1313NU)

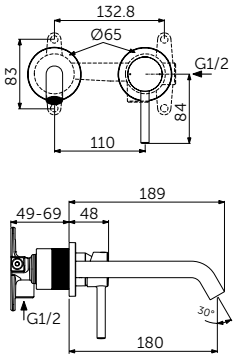

BIDET MIXER

MODEL	SKU
Metal pop-up waste	BC197XG

- EasyFix® system
- Ball joint aerator 5l/min
- FirmaFlow® ceramic disc cartridge 28mm
- Temperature limiter
- Supplied with flexible hoses G3/8 PEX

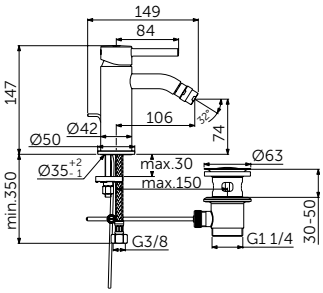

Easy Fix Water Saving Light-Move

EXPOSED SHOWER MIXER

MODEL	SKU
No diverter	BC200XG

- FirmaFlow® ceramic disc cartridge 38mm
- Temperature limiter
- Check valves
- Standard s-connectors with noise reducers

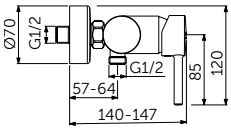

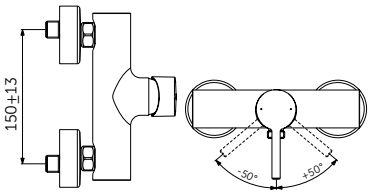

EXPOSED BATH & SHOWER MIXER

MODEL	SKU
With automatic diverter	BC199XG

- FirmaFlow® ceramic disc cartridge 38mm
- Temperature limiter
- Check valves
- Hidden aerator
- Standard s-connectors with noise reducers

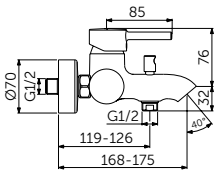

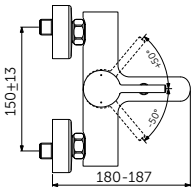

BUILT-IN SHOWER MIXER KIT 1 + 2

MODEL	SKU
No diverter	A6940XG

- Kit 1 + Kit 2 (complete set)
- Ceramic disc cartridge 47mm

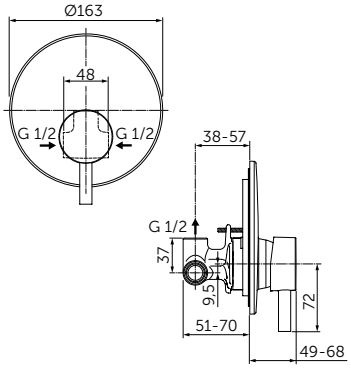

BUILT-IN BATH & SHOWER MIXER KIT 1 + 2

MODEL	SKU
With automatic diverter	A6939XG

- Kit 1 + Kit 2 (complete set)
- With pull-out knob
- Ceramic disc cartridge 47mm

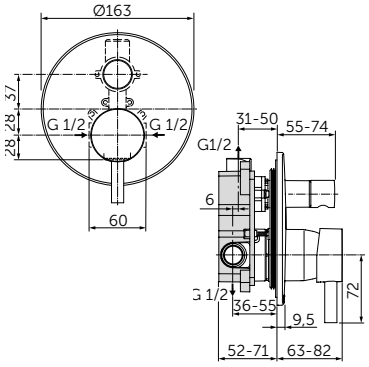

GRANDE BASIN MIXER

MODEL	SKU
Click clack waste	BD131XG

- EasyFix® system
- Slim aerator 5l/min
- FirmaFlow® ceramic disc cartridge 28mm
- Temperature limiter
- Supplied with flexible hoses G3/8 PEX
- Comfort area: Height 120mm
- BD131XG to be used only in combination with washbasins with overflow

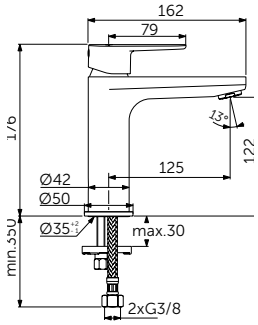

GRANDE BASIN MIXER

MODEL	SKU
With metal pop-up waste	BC699XG

- EasyFix® system
- Slim aerator 5l/min
- FirmaFlow® ceramic disc cartridge 28mm
- Temperature limiter
- Supplied with flexible hoses G3/8 PEX
- Comfort area: Height 120mm

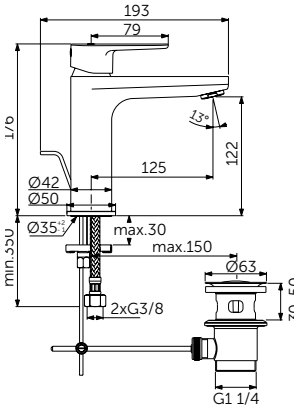

SIDE HANDLE GRANDE BASIN MIXER

MODEL	SKU
With metal pop-up waste	BC703XG

- EasyFix® system
- Slim aerator 5l/min
- FirmaFlow® ceramic disc cartridge 28mm
- Temperature limiter
- Supplied with flexible hoses G3/8 PEX
- Comfort area: Height 159mm

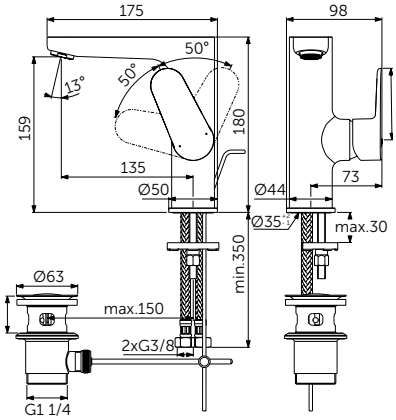

BUILT-IN BASIN MIXER KIT2

MODEL	SKU
224mm cast spout	BD133XG

- Kit 2
- Metal escutcheon
- Metal handle with printed red and blue colour indication
- Slim aerator 5l/min
- To be used only in combination with A1313NU Kit – to be purchased separately

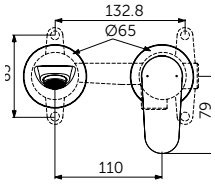

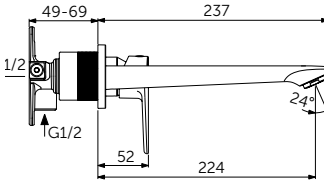

Easy Fix Water Saving Light-Move

BIDET MIXER

MODEL	SKU
With metal pop-up waste	BC705XG

- EasyFix® system
- Ball joint aerator 5l/min
- FirmaFlow® ceramic disc cartridge 28mm
- Temperature limiter
- Supplied with flexible hoses G3/8 PEX

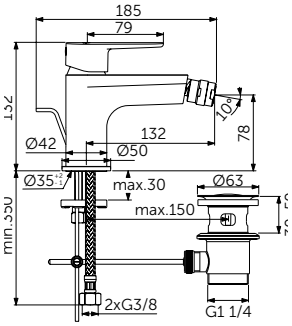

EXPOSED SHOWER MIXER

MODEL	SKU
No diverter	BC499XG

- FirmaFlow® ceramic disc cartridge 38mm
- Temperature limiter
- Check valve
- Standard S connectors

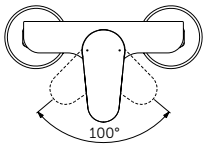

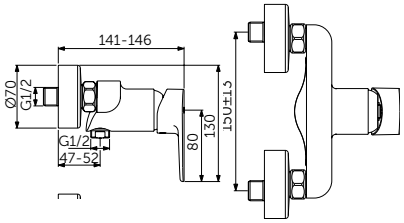

EXPOSED BATH & SHOWER MIXER

MODEL	SKU
With automatic diverter	BC500XG

- FirmaFlow® ceramic disc cartridge 38mm
- Temperature limiter
- Check valve
- Standard S-connectors with noise reducers

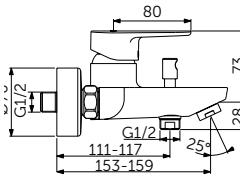

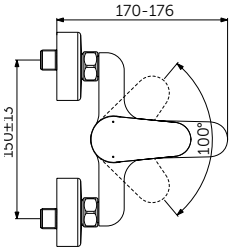

BUILT-IN SHOWER MIXER KIT 1 + KIT 2

MODEL	SKU
No diverter	A7192XG

- Kit 1 + Kit 2 (complete set)
- Ceramic disc cartridge 47mm
- Metal handle with red and blue indicators
- Metal escutcheon

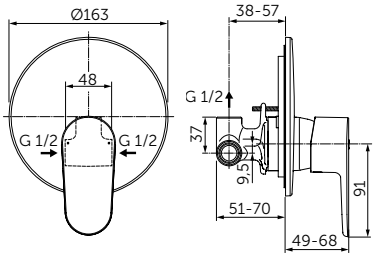

BUILT-IN BATH & SHOWER MIXER KIT 1 + KIT 2

MODEL	SKU
With automatic diverter	A7193XG

- Kit 1 + Kit 2 (complete set)
- Ceramic disc cartridge 47mm
- Metal handle with red and blue indicators
- Metal escutcheon

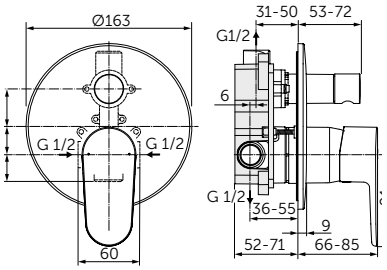

TONIC II FREESTANDING BATH & SHOWER MIXER

MODEL	SKU
With automatic diverter	A6347XG

- Adjustable aerator
- FirmaFlow® ceramic disc cartridge 38mm
- Temperature limiter
- Shower set with 1 function stick hand spray, metal wall bracket and shower hose
- Kit 1 A6133NU to be purchased separately

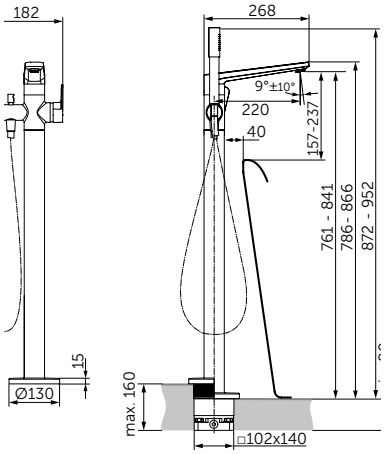

Light-Move

Ceraline Vessel Basin Mixer - BC194XG

Basins, Toilets and Furniture

CLOSE YOUR EYES AND IMAGINE YOUR PERFECT BATHROOM. WHETHER IT'S BOLD OR MINIMALISTIC, YOU'VE GOT THE FREEDOM TO CREATE IT.

Tesi

CLASS AND ELEGANCE RE-INVENTED

With a slender form, this classic collection effortlessly integrates itself into any bathroom style. The adaptable look and characteristic curves blend into your space fluidly. The silk black makeover gives the products a contemporary twist which makes them a bolder design statement that adds an air of sophistication. Featuring our innovative AquaBlade® technology, Tesi creates a seamless synergy of functional perfection and aesthetic beauty.

Tesi Wall-Hung Toilet AquaBlade - T0079V3
Tesi Wall-Hung Bidet - T3552V3
Cerafine O Bidet Mixer - BC705XG
Altes Flush Plate - Black Ceramic - R0130A6
IOM Towel Rail 45cm - A9117XG

AquaBlade® TECHNOLOGY

Wall-hung bowl

Wall-hung bidet

Floorstanding Back-To-Wall Bowl

Floorstanding Back-To-Wall Bidet

Vanity and Basin Unit

Connect Air

A VERSATILE RANGE WITH SUBTLE TOUCHES

Combining fine edges, and slim, tapering profiles, Connect Air is perfect for any contemporary home. This range is extremely versatile and is made with an almost weightless beauty, to elegantly breathe new life into your bathroom.

The collection was created exclusively for Ideal Standard by Robin Levien – the Royal Designer for Industry. The black colour
and silky, soft finish make it the next generation in bathroom beauty. The toilets are available with the innovative AquaBlade® flushing technology.

OUR SELECTION

Cerafine O Grande Basin Mixer - BC554XG
Connect Air Vanity 80cm - E0279V3
Tesi Basin Unit 80cm - T0051ZT
Mirror with Light 80cm - T3351BH

AquaBlade® TECHNOLOGY

Wall-hung bowl

Wall-hung bidet

Cube Basin

Hand Wash Basin

Vanity*

*Compatible with Tesi basin unit

VANITY 825 MM

MODEL	SKU
Vanity 825 mm	T3509V3

- Tap hole
- Overflow
- Wall mounted installation
- Compatible with Tesi basin unit 800mm T0051ZT (to be purchased separately)

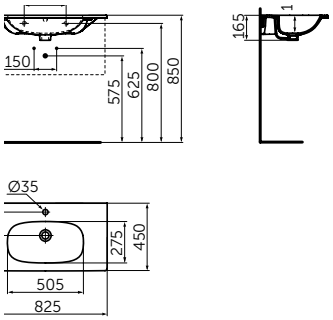

VANITY 625 MM

MODEL	SKU
Vanity 625 mm	T3510V3

- Tap hole
- Overflow
- Wall mounted installation
- Compatible with Tesi basin unit 600mm T0050ZT (to be purchased separately)

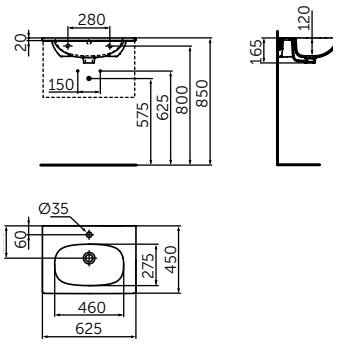

BASIN UNIT 800 MM

MODEL	SKU
Basin unit 800 mm	T0051ZT

- 2 adjustable drawers with soft closing system
- Built-in handle
- Recommended Space Saving siphon EE23033967
- For use with Tesi (T3509V3) and Connect Air (E0279V3) vanities (to be purchased separately)

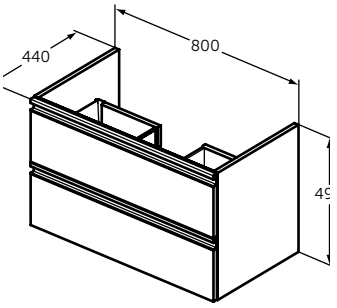

BASIN UNIT 600 MM

MODEL	SKU
Basin unit 600 mm	T0050ZT

- 2 adjustable drawers with soft closing system
- Built-in handle
- Recommended Space Saving siphon EE23033967
- For use with Tesi (T3510V3) and Connect Air (E0289V3) vanities (to be purchased separately)

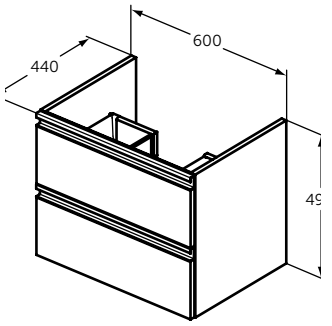

WALL-HUNG BOWL - AQUABLADE® TECHNOLOGY

MODEL	SKU
Wall-hung bowl - AquaBlade® technology	T0079V3

- AquaBlade® flushing technology
- Fully hidden wall fixation
- Low flushing 4,5/3 litres
- T0079V3 model: compatible with slim sandwich seat T3527V3 (to be purchased separately)

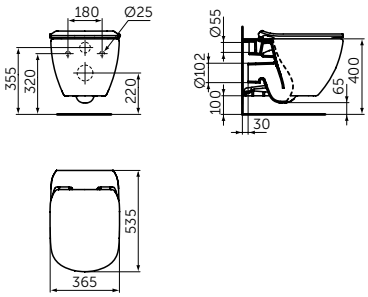

Soft Closing

Aqua Blade

Hidden Fixations

FLOORSTANDING BACK-TO-WALL BOWL - AQUABLADE TECHNOLOGY

MODEL	SKU
Floorstanding back-to-wall - AquaBlade® technology including seat	T3536V3

- AquaBlade® flushing technology
- Low flushing 4,5/3 litres
- Horizontal outlet - can be transformed in vertical outlet (VO) ordering one of the accessories elbow. VO can cover from 110 to 200mm roughin-in
- T3536V3 model: slim sandwich seat included (T3527V3)

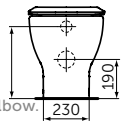

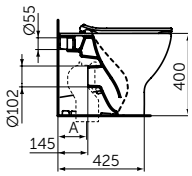

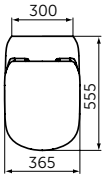

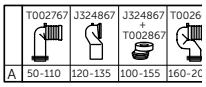

SLIM SANDWICH SEAT

MODEL	SKU
Slim sandwich seat	T3527V3

- Soft closing
- Easy removable seat

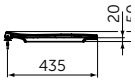

WALL-HUNG BIDET

MODEL	SKU
Wall-hung bidet	T3552V3

- Standard overflow
- Tap hole
- Fully hidden wall fixation

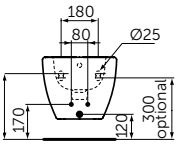

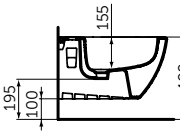

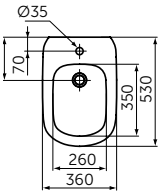

FLOORSTANDING BACK-TO-WALL BIDET

MODEL	SKU
Floorstanding back-to-wall bidet	T3540V3

- Standard overflow
- Tap hole

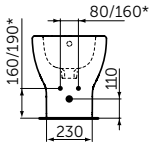

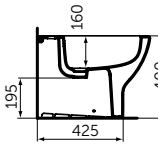

*compatible with Tesi Classic

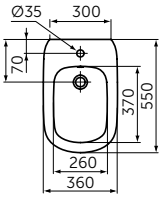

Easy Take Off

VANITY 840 MM

MODEL	SKU
Vanity 840 mm	E0279V3

- Tap hole
- Overflow
- Wall mounted installation
- Compatible with Tesi basin unit 800mm T0051ZT (to be purchased separately)

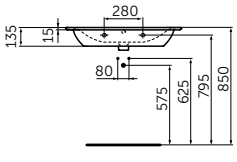

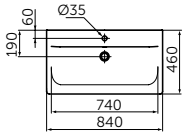

VANITY 640 MM

MODEL	SKU
Vanity 640 mm	E0289V3

- Tap hole
- Overflow
- Wall mounted installation
- Compatible with Tesi basin unit 600mm T0050ZT (to be purchased separately)

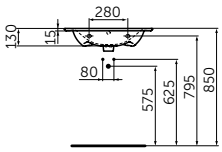

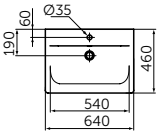

CUBE BASIN 600 MM

MODEL	SKU
Cube basin 600 mm	E0298V3

- Tap hole
- Overflow
- Wall mounted installation

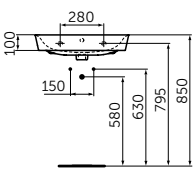

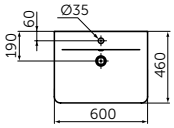

CUBE HAND WASH BASIN 400 MM

MODEL	SKU
Cube hand wash basin 400 mm	E0307V3

- Tap hole
- Overflow
- Wall mounted installation

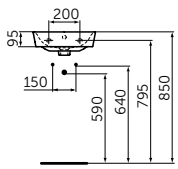

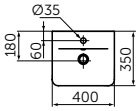

WALL-HUNG BOWL - AQUABLADE® TECHNOLOGY

MODEL	SKU
Wall-hung bowl - AquaBlade® technology	E0054V3

- AquaBlade® flushing technology
- Fully hidden wall fixation
- Low flushing 4,5/3 litres
- Compatible with slim wrapover seat E0368V3 (to be purchased separately)

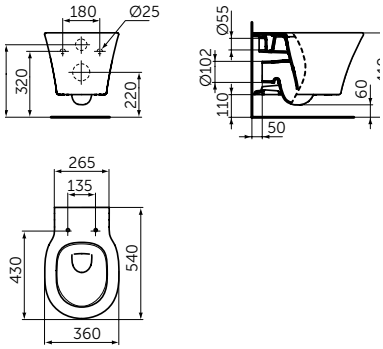

SLIM WRAPOVER SEAT

MODEL	SKU
Slim wrapover seat	E0368V3

- Soft closing
- Easy removable seat

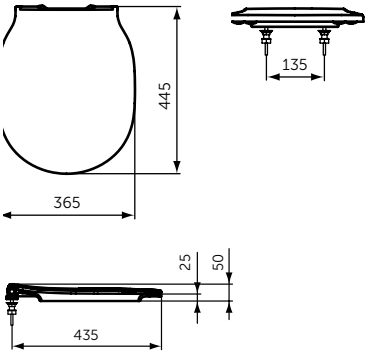

WALL-HUNG BIDET

MODEL	SKU
Wall-hung bidet	E0266V3

- Standard overflow
- Tap hole
- Fully hidden wall fixation

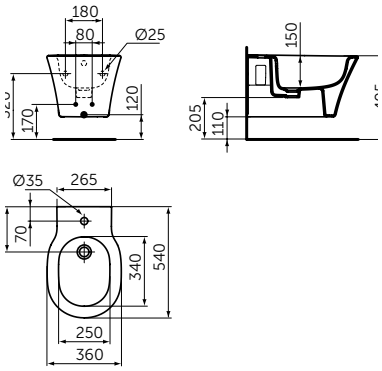

Aqua Blade | Hidden Fixations | Flush 4.5 L | Soft Closing | Easy Take Off

TOWEL RAIL

MODEL	SKU
Towel Rail	A9117XG

- W: 450 H: 48 D: 58mm
- Wall mounting

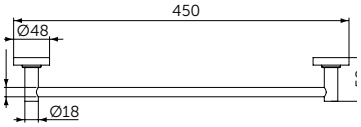

TOWEL HOOK

MODEL	SKU
Towel Hook	A9115XG

- W:48 H:48 D:45mm
- Wall mounting

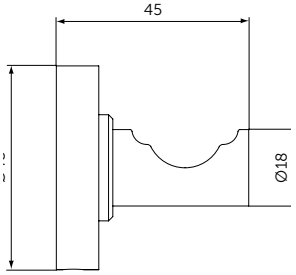

TOILET ROLL HOLDER

MODEL	SKU
Toilet Roll Holder	A9132XG

- W:48 H:147 D:59mm
- Wall mounting

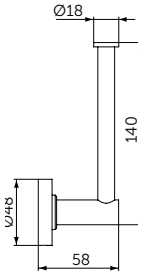

SOAP DISH & HOLDER

MODEL	SKU
Soap Dish & Holder	A9122XG

- W:114 H:48 D:127mm
- Frosted glass dish
- Wall mounting

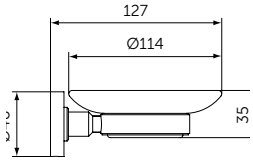

TUMBLER & HOLDER

MODEL	SKU
Tumbler & Holder	A9120XG

- W:66 H:96 D:103mm
- Frosted glass tumbler
- Wall mounting

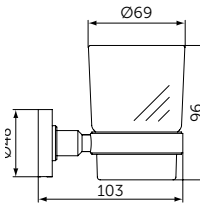

GLASS SHELF

MODEL	SKU
Glass Shelf	A9124XG

- W:520 H:48 D:138mm
- Frosted glass shelf
- Wall mounting

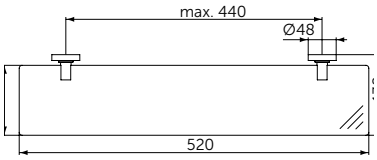

TOILET BRUSH & HOLDER

MODEL	SKU
Toilet Brush & Holder	A9119XG

- W:110 H:375 D:139mm
- Frosted glass holder
- Black brush head
- Wall mounting

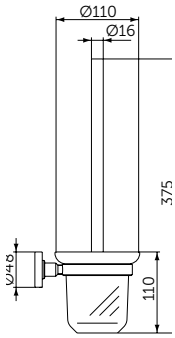

SHOWER BASKET

MODEL	SKU
Shower Basket	A9105XG

- W:211 H:44 D:127mm
- Wall mounting

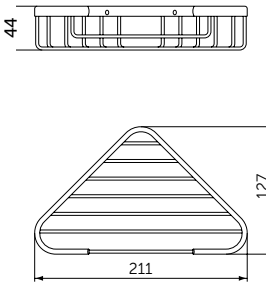

TOWEL RING

MODEL	SKU
Towel Ring	A9130XG

- W:159 H:183 D:58mm
- Wall mounting

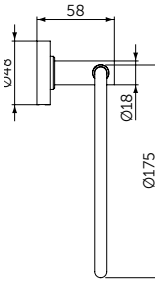

ACCESSORIES BUNDLE

MODEL	SKU
Accessories Bundle	A9246XG

- Toilet brush & holder A9119XG
- Toilet roll holder A9132XG
- Towel hook A9115XG

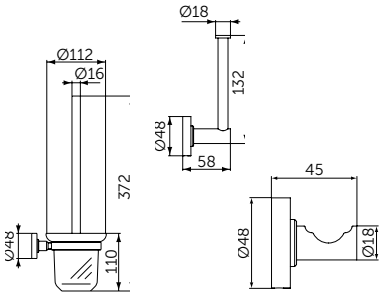

ACCESSORIES BUNDLE

MODEL	SKU
Accessories Bundle	A9245XG

- Toilet brush & holder A9119XG
- Tumbler & holder A9120XG
- Soap dish & holder A9122XG

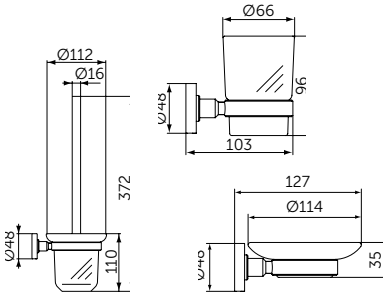

FREE FLOW WASTE

MODEL	SKU
Free flow waste	J3291XG

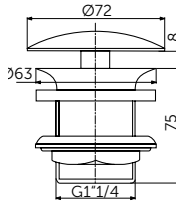

SLOTTED CLICKER WASTE

MODEL	SKU
Slotted clicker waste	E1482XG

- For basins with an overflow

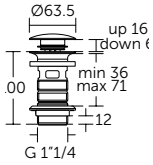

UNSLOTTED CLICKER WASTE

MODEL	SKU
Unslotted clicker waste	E1483XG

- For basins with no overflow

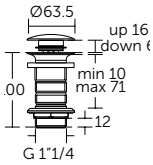

CONTEMPORARY BOTTLE TRAP

MODEL	SKU
Contemporary bottle trap	T4441XG

- 32 x 75mm

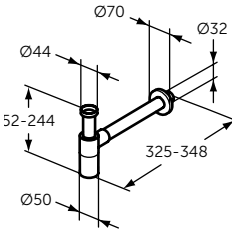

OLEAS™® M1

MODEL	SKU
Round Flush Plate	R0115A6

- Round design
- Dual flush
- Mechanical actuation
- Actuation force < 20N

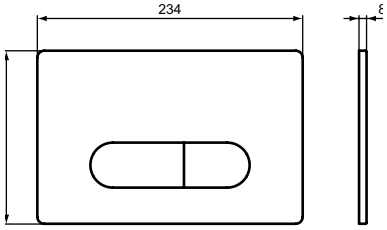

OLEAS™® M2

MODEL	SKU
Square Flush Plate	R0121A6

- Square design
- Dual flush
- Mechanical actuation
- Actuation force < 20N

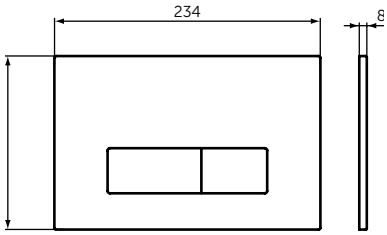

OLEAS™® M3

MODEL	SKU
Soft square Flush plate	R0123A6

- Soft-square design
- Dual flush
- Mechanical actuation
- Actuation force < 20N

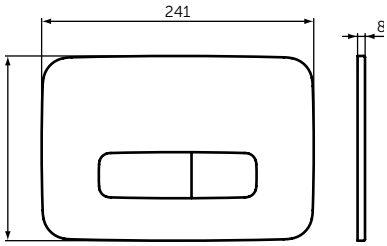

Dual Flush

Mechanical Actuation

Showering

SHOWERING HAS BECOME PART OF OUR DAILY ROUTINE. WHETHER YOU SEE IT AS A PURELY FUNCTIONAL PROCESS OR YOU LIKE TO LAVISH IN THE EXPERIENCE, OUR WIDE SELECTION OF INNOVATIVE PRODUCTS WILL MEET ALL YOUR NEEDS.

Ceratherm T & Idealrain

MAKE YOUR SHOWER THE CENTREPIECE OF YOUR BATHROOM

Ceratherm T is an extensive range of thermostatic shower and bath mixers. Idealrain complements the collection with a wide choice of hand sprays, rain showers and showering accessories.

Ceraline Built-in Bath & Shower Mixer - A6939XG
Idealrain Hand Shower - BC774XG
Idealrain Shower Hose 125cm - A3306XG
Idealrain Hand Shower Support - BC807XG

Ceratherm T25
Exposed Shower System
–
A7545XG

Round Built-In Thermostats

Square Built-In Thermostats

Exposed Thermostats

Round Rain Shower Head

Square Rain Shower Head

Exposed Shower Systems

Round Hand Spray

Stick Hand Spray

OUR SELECTION

Idealrain Rainshower Round 300mm - A5803XG
Ceraline Built-in Bath & Shower Mixer - A6939XG
Idealrain Hand Shower - BC774XG
Idealrain Shower Hose 125cm - A3306XG
Idealrain Hand Shower Support - BC807XG

FirmaFlow® Therm

POWERING THE EVERYDAY

Ideal Standard's shower solutions performs beautifully, because we design every model from the inside out. You can install with confidence and ease. While enjoying unrivalled levels of safety and performance. Our shower systems are fitted with FirmaFlow® Therm, the most durable thermostatic cartridge. The ergonomic design of our products delivers the perfect experience, day after day.

ECOFLOW REGULATOR

WATER IS A PRECIOUS RESOURCE. SAVE WATER WITH ECOFLOW.

Ceratherm T thermostats feature an eco-setting, allowing you to limit flow up to 50% without any loss of performance. And our Idealrain handsprays are fitted with a flow restrictor (8L/min) to provide maximum water efficiency.

TEMPERATURE CONTROL

JUST RIGHT, EVERY TIME.

Should the hot or cold water supply unexpectedly cut off, the water flow will stop automatically to protect from shocks and scalds. Only restarting, under complete control, when the water supply returns.

COOL BODY

COOL TO THE TOUCH. PROTECT ALL USERS.

Cool Body technology to ensure the hot water flow is always surrounded by cold water. So whatever your perfect temperature is, the Ceratherm T body stays cool to the touch at all times. Giving total peace of mind, protecting users of all ages from scalding.

MAXIMUM SPRAY

MADE FOR MAXIMUM COMFORT.

Idealrain delivers a personal shower experience. Large handsprays ensure maximum comfort and edge-to-edge nozzles are designed to create big indulgent downpours.

EASY CLEAN

PEACE OF MIND

Our head showers and hand showers feature soft rub-clean nozzles.
They help reduce limescale and facilitate cleaning for a shower that will look good for a long time.

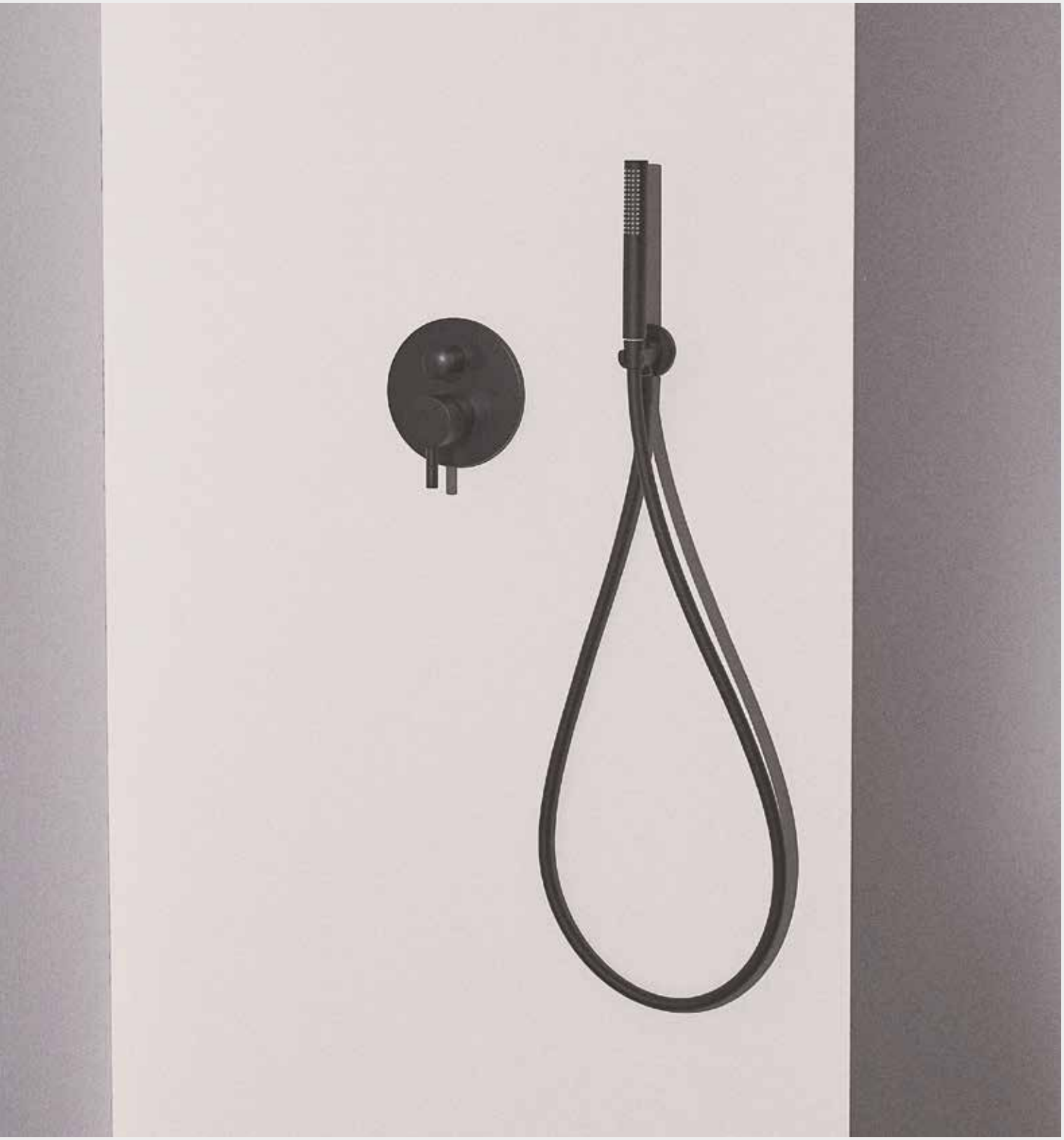

ROUND BUILT-IN THERMOSTATIC SHOWER MIXER - KIT 2

MODEL	SKU
Built-in thermostatic shower mixer without diverter	A5813XG

- Kit 1 A1000NU to be purchase separately
- IS Thermostatic cartridge
- Ceramic discs on/off valve 3/4" - 90°
- Metal handle with hot water stop button pre-fixed at 40°C
- Max. hot water temperature adjustable
- Escutcheon holder with integrated sealing
- Maximum flow rate at 3 bar - 26 l/min
- Comply with EN1111

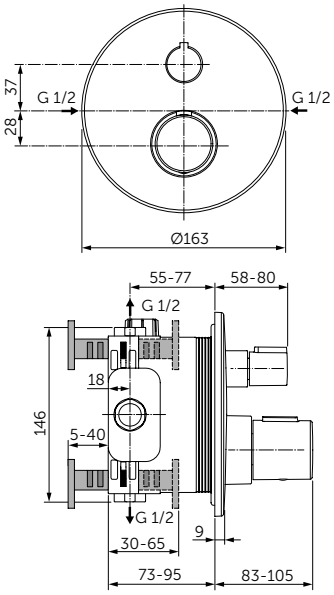

ROUND BUILT-IN THERMOSTATIC BATH AND SHOWER MIXER - KIT 2

MODEL	SKU
Built-in thermostatic bath and shower mixer with diverter	A5814XG

- Kit 1 A1000NU to be purchase separately
- IS Thermostatic cartridge
- Ceramic disc diverter - 180°
- Metal handle with hot water stop button pre-fixed at 40°C
- Max. hot water temperature adjustable
- Escutcheon holder with integrated sealing
- Maximum flow rate at 3 bar - 21 l/min
- Comply with EN1111

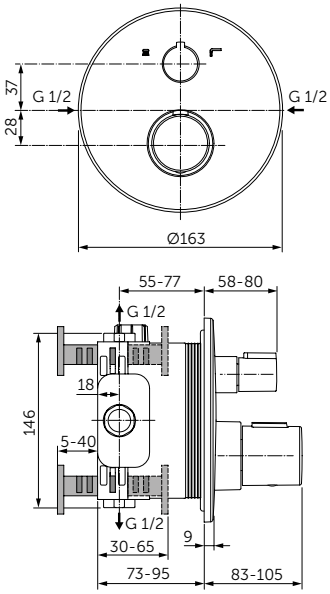

40 Degree Safety Button

Water and Energy Saving

Temperature Limit Stop

Metal Handle

SQUARE BUILT-IN THERMOSTATIC BATH AND SHOWER MIXER - KIT 2

MODEL	SKU
Built-in thermostatic bath and shower mixer with diverter	A7522XG

- Kit 1 A1000NU to be purchase separately
- IS Thermostatic cartridge
- Ceramic disc diverter - 180°
- Metal handle with hot water stop button pre-fixed at 40°C
- Max. hot water temperature adjustable
- Escutcheon holder with integrated sealing and possible angle adjustment
- Maximum flow rate at 3 bar - 21 l/min
- Comply with EN1111

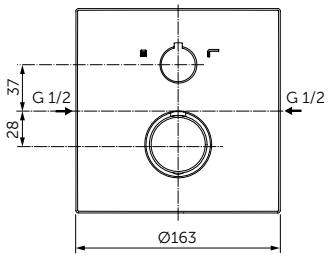

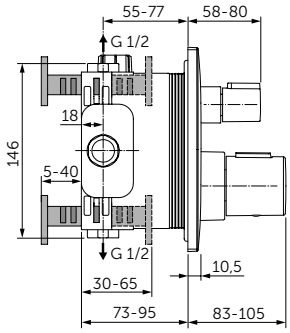

SQUARE BUILT-IN THERMOSTATIC SHOWER MIXER - KIT 2

MODEL	SKU
Built-in thermostatic shower mixer without diverter	A6956XG

- Kit 1 A1000NU to be purchase separately
- IS Thermostatic cartridge
- Ceramic discs on/off valve 3/4" - 90°
- Metal handle with hot water stop button pre-fixed at 40°C
- Max. hot water temperature adjustable
- Escutcheon holder with integrated sealing and possible angle adjustment
- Maximum flow rate at 3 bar - 26 l/min
- Comply with EN1111

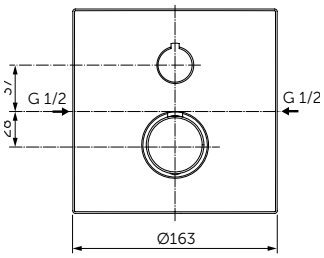

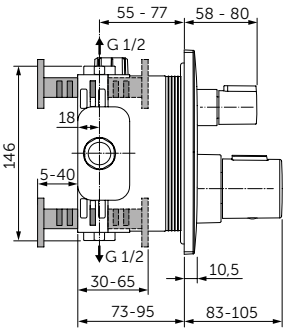

EXPOSED THERMOSTATIC SHOWER MIXER

MODEL	SKU
Thermostatic shower mixer	A7201XG

- FirmaFlow® Therm - thermostatic cartridge
- S-connectors with hidden nuts
- Ceramic valve G1/2 180°
- Cool body technology
- Hot water at 40°C stop button and 50% water volume stop button
- Non return valve
- Comply with EN 1111

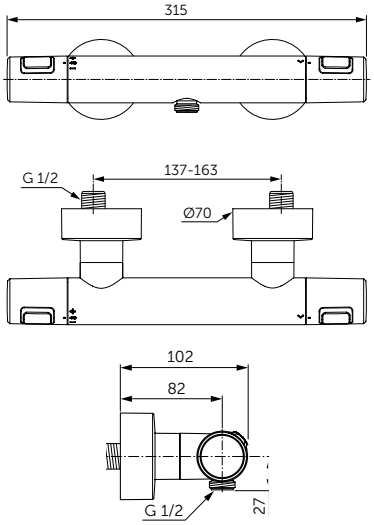

EXPOSED THERMOSTATIC BATH & SHOWER MIXER

MODEL	SKU
Thermostatic bath and shower mixer	A7544XG

- FirmaFlow® Therm - thermostatic cartridge
- S-connectors with hidden nuts
- Ceramic disc diverter integrated in the handle - 180°
- Cool body technology
- Hot water at 40°C stop button and 50% water volume stop button
- Non return valve
- Comply with EN 1111

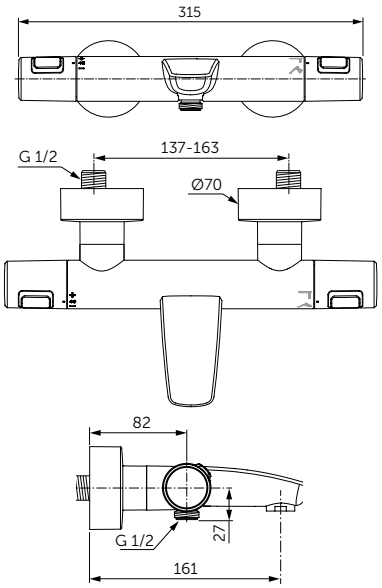

EXPOSED SHOWER SYSTEM

MODEL	SKU
Thermostatic mixer, round handspray & rainshower	A7545XG

- FirmaFlow® Therm - thermostatic cartridge
- S-connectors with hidden nuts
- Ceramic disc diverter integrated in the handle - 180°
- Cool body technology
- Hot water at 40°C stop button and 50% water volume stop button
- Non return valve
- Shower head made of plastic, Ø 200 mm, 12 l/min water flow limiter
- 100mm 1F Idealrain hand spray with 8l/min flow regulator
- Vertically adjustable wall bracket for easy installation
- Angle and heigth adjustable slider for hand spray on the rail
- 1750mm Idealflex shower hose
- Comply with EN 1111

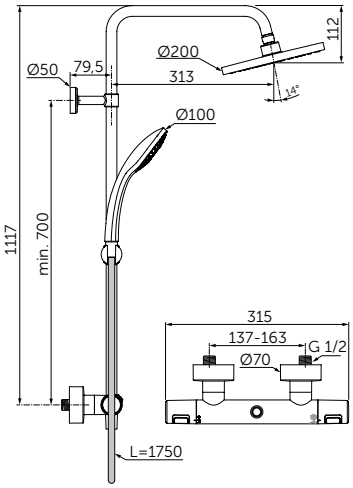

Cool Body | 40 Degree Safety Button | Water and Energy Saving | Swivel Arm Shower | Easy Mount

EXPOSED FLEX SHOWER SYSTEM

MODEL	SKU
Thermostatic mixer, round handspray & rainshower	A7546XG

- Heigth of rain shower head adjustable during installation
- FirmaFlow® Therm - thermostatic cartridge
- S-connectors with hidden nuts
- Ceramic disc diverter integrated in the handle - 180°
- Cool body technology
- Hot water at 40°C stop button and 50% water volume stop button
- Non return valve
- Shower head made of plastic, Ø 200 mm, 12 l/min water flow limiter
- 100mm 1F Idealrain hand spray with 8l/min flow regulator
- Angle and heigth adjustable slider for hand spray on the rail
- 1750mm Idealflex shower hose
- Comply with EN 1111

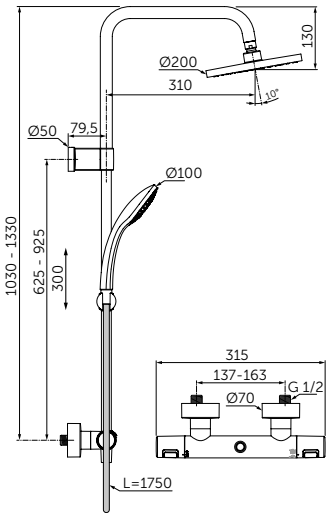

EXPOSED SHOWER SYSTEM

MODEL	SKU
Thermostatic mixer, stick handspray & rainshower	BC748XG

- FirmaFlow® Therm - thermostatic cartridge
- S-connectors with hidden nuts
- Ceramic disc diverter integrated in the handle - 180°
- Cool body technology
- Hot water at 40°C stop button and 50% water volume stop button
- Non return valve
- Shower head made of metal, Ø 300 mm, 12 l/min water flow limiter
- Stick hand spray made of metal with 8l/min flow regulator
- Vertically adjustable wall bracket for easy installation
- Fix metal wall bracket for hand spray included
- 1750mm Idealflex shower hose
- Comply with EN 1111

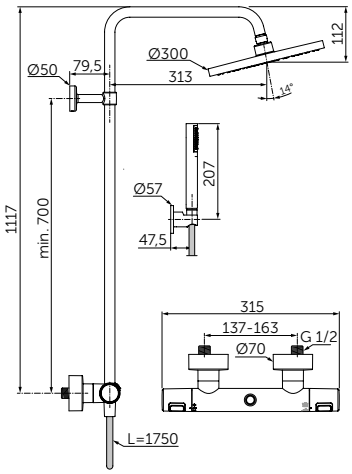

EXPOSED SHOWER SYSTEM

MODEL	SKU
Single lever mixer, handspray & rainshower	BC750XG

- FirmaFlow® ceramic disk cartridge with hot water limiter
- S-connectors with hidden nuts
- Metal handle with red and blue indicator
- Non return valve
- Ceramic disc diverter integrated in the handle - 180°
- Angle and heigth adjustable slider for hand spray on the rail
- Metal Wall bracket – compensate up to 10mm
- Shower head made of plastic, Ø 200 mm, 12 l/min water flow limiter
- 100mm 1F Idealrain hand spray with 8l/min flow regulator
- 1750mm Idealflex shower hose

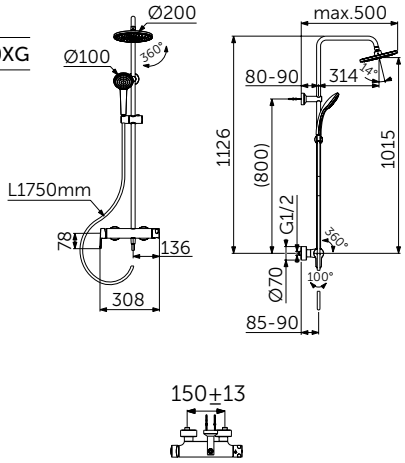

EXPOSED SHOWER SYSTEM WITH BATH SPOUT - 1126MM

MODEL	SKU
Single lever mixer, bath spout, hand spray & rainshower	BC525XG

- FirmaFlow® ceramic disk cartridge with hot water limiter
- S-connectors with hidden nuts
- Metal handle with red and blue indicator
- Non return valve
- 3-way ceramic disc diverter integrated in the handle - 360°
- Angle and heigth adjustable slider for hand spray on the rail
- Metal Wall bracket – compensate up to 10mm
- Shower head made of plastic, Ø 200 mm, 12 l/min water flow limiter
- 100mm 1F Idealrain hand spray with 8l/min flow regulator
- 1750mm Idealflex shower hose

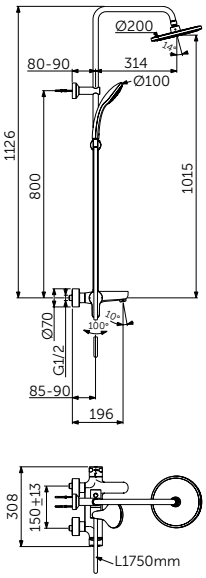

EXPOSED SHOWER SYSTEM WITH BATH SPOUT - 1507MM

MODEL	SKU
Single lever mixer, bath spout, hand spray & rainshower	BC749XG

- FirmaFlow® ceramic disk cartridge with hot water limiter
- S-connectors with hidden nuts
- Metal handle with red and blue indicator
- Non return valve
- 3-way ceramic disc diverter integrated in the handle - 360°
- Angle and heigth adjustable slider for hand spray on the rail
- Metal Wall bracket – compensate up to 10mm
- Shower head made of plastic, Ø 200 mm, 12 l/min water flow limiter
- 100mm 1F Idealrain hand spray with 8l/min flow regulator
- 1750mm Idealflex shower hose

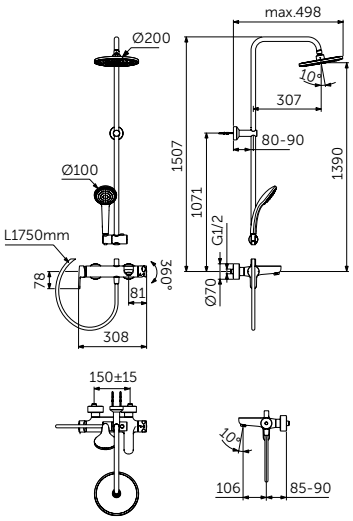

Light Move | Eco Flow Regulator | Easy Clean Nozzles | Ideal Flex | Easy Mount

SHOWER SYSTEM FOR EXPOSED MIXERS

MODEL	SKU
Handspray & rainshower	BC747XG

- Ceramic disc diverter - 90°
- Shower head made of plastic, Ø 200 mm, 12 l/min water flow limiter
- 100mm 1F Idealrain hand spray with 8l/min flow regulator
- Vertically adjustable wall bracket for easy installation
- Angle and heigth adjustable slider for hand spray on the rail
- 1750mm Idealflex shower hose
- 800mm Idealflex shower hose to connect to exposed fitting

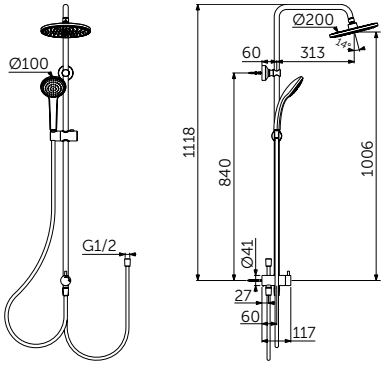

SHOWER KIT

MODEL	SKU
Hand shower and sliding bar 600mm	BD142XG

- Ø 100 mm 1 function hand spray - rain (soft water spray)
- 600 mm Idealrain sliding bar
- Vertically adjustable wall bracket for easy installation
- Suitable for low and high pressure
- Limescale resistant with rub clean nozzles
- 8 litres per minute Eco flow regulator
- 1750mm Idealflex hose
- Angle and heigth adjustable slider for hand spray

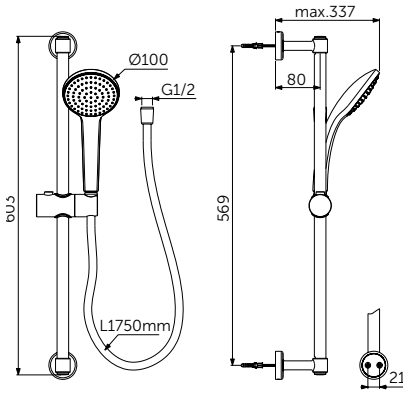

HAND SHOWER

MODEL	SKU
Ø 100m	B9402XG

- 1 function - rain (soft water spray)
- Suitable for low and high pressure
- Limescale resistant with rub clean nozzles
- G1/2" connector
- Removable 8 litres per minute Eco flow regulator

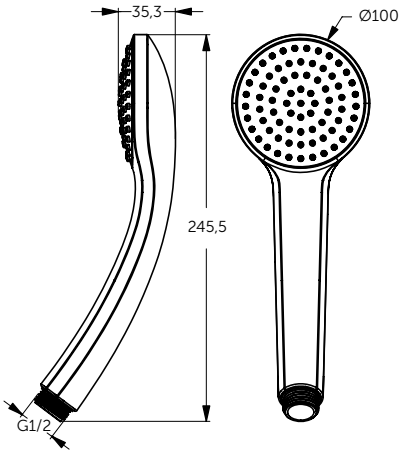

Swivel Arm Shower

Large Showering Area

Easy Mount

HAND SHOWER

MODEL	SKU
Stick	BC774XG

- Stick hand spray made of metal
- 1 function - normal spray (wide, rich jet)
- Limescale resistant with rub clean nozzles
- 8 l/min flow rate limit

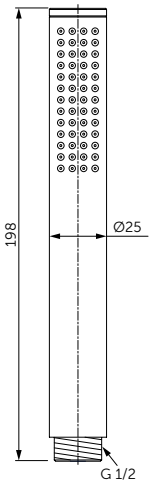

SHOWER HOSE

MODEL	SKU
1250mm	A3306XG
1750mm	A4109XG

- Reduces limescale and facilitate cleaning
- Connical nuts with G1/2" connectors
- Anti-Twist
- Strong - support up to 50kg
- Resists up to 5 bar constant flow pressure

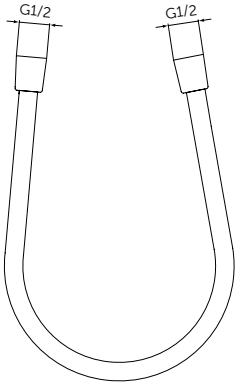

ROUND RAINSHOWER

MODEL	SKU
Ø200mm	BD140XG

- Suitable for low or high pressure
- 12 litres per minute Eco flow regulator
- Rub clean nozzles for protection against lime scale
- Can be used with a horizontal wall arm (B9445XG) or a vertical ceiling arm (B9446XG)
- ABS material

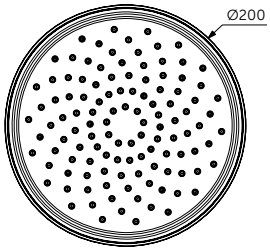

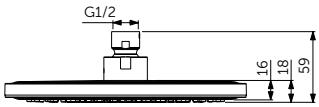

Easy Clean Nozzles | Metal Hand Spray | Easy Clean | Anti-Twist | Universal Connection

ROUND RAINSHOWER

MODEL	SKU
Ø300mm	A5803XG

- Made of metal
- Suitable for low or high pressure
- Removable 12 litres per minute Eco flow regulator
- Rub clean nozzles for protection against lime scale
- Can be used with a horizontal wall arm (B9445XG) or a vertical ceiling arm (B9446XG)

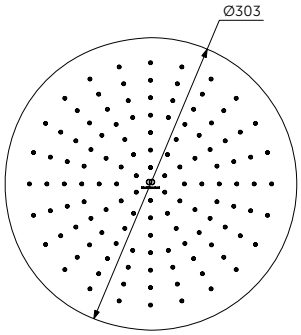

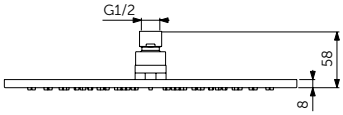

SQUARE RAINSHOWER

MODEL	SKU
200x200mm	B0024XG

- Made of metal
- Suitable for low or high pressure
- Removable 12 litres per minute Eco flow regulator
- Rub clean nozzles for protection against lime scale
- Can be used with a horizontal wall arm (B9445XG) or a vertical ceiling arm (B9446XG)

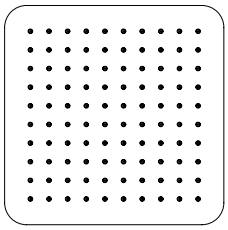

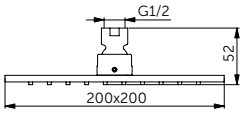

WALL CONNECTION

MODEL	SKU
400mm	B9445XG

- Wall connection - 400 mm
- For head shower
- Metal escutcheon
- G1/2" connector

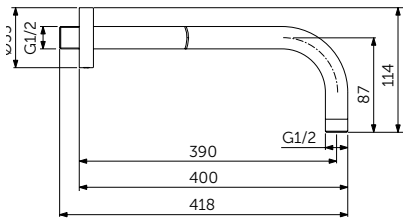

Supports up to 50kg

Resistant to 5 Bar Flow Pressure

Large Showring Area

Metal Rainshower

Eco Flow Regulator

CEILING CONNECTION

MODEL	SKU
150mm	B9446XG

- Ceiling connection - 150 mm
- For head shower
- Metal escutcheon
- G1/2" connector

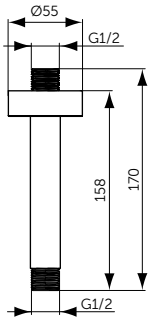

HAND SHOWER SUPPORT

MODEL	SKU
Hand shower support	BC806XG

- Made of metal with plastic insert to protect surface
- For hose with connical nuts

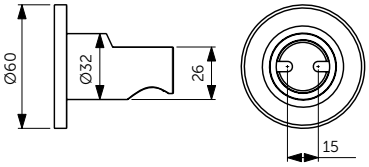

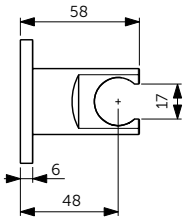

HAND SHOWER SUPPORT

MODEL	SKU
Hand shower support	BC807XG

- Made of metal with plastic insert to protect surface
- For hose with connical nuts
- G1/2" connection with back flow prevention

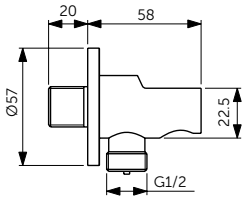

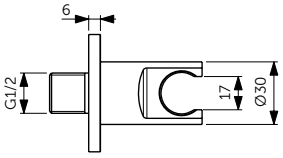

Universal Connection

WALL ELBOW

MODEL	SKU
Wall elbow	BC808XG

- Made of metal
- G1/2" connection with back flow prevention

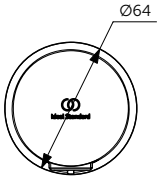

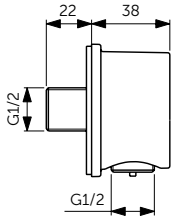

OUR SELECTION

Ultra Flat New Shower Tray 120x90cm - T4483V3
Connect 2 Wetroom Panel 120cm - K9379V3
Connect 2 Wall Fixation - K9380V3
Idealrain Rainshower Round 300mm - A5803XG
Ceraline Built-in Bath & Shower Mixer - A6939XG
Idealrain Hand Shower - BC774XG
Idealrain Shower Hose 125cm - A3306XG
Idealrain Hand Shower Support - BC807XG

Ultra Flat New

CREATE MORE WITH LESS

The Ultra Flat New collection has a purity of design and purpose that sets it apart. Ultra slim, smooth and stylish, these shower trays give your bathroom the seamless appearance of a wet room. Strip back the unnecessary, and step into something contemporary with an Ultra Flat New, silk black shower tray. Available in 2 shapes, 8 different sizes and 4 waste cover colours.

2 SHAPES
8 SIZES
25 MM THICKNESS ONLY

SQUARE

MODEL	SKU
900mm square	T4467V3
800mm square	T4466V3

- Slim and sleek design creates a sense of space
- Height 25 mm
- Lightweight with an acrylic coating
- Light resistant to prevent discolouring
- Light and easy to install by one person
- Universal installation: flush fitting, surface-mounted fitting, raised fitting
- CE certified and approved

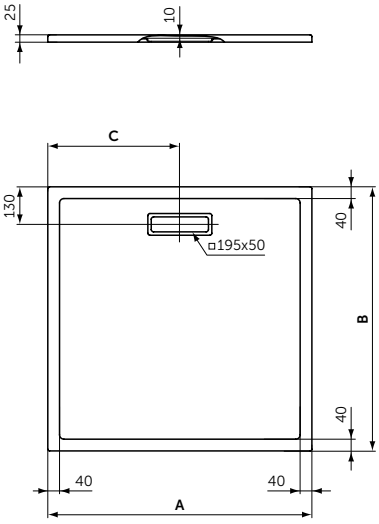

	A (mm)	B (mm)	C (mm)
T4467	900	900	450
T4466	800	800	400

RECTANGULAR

MODEL	SKU
1200 x 900mm	T4483V3
1200 x 800mm	T4469V3
1200 x 700mm	T4476V3
1000 x 800mm	T4468V3
1000 x 700mm	T4475V3
900 x 700mm	T4474V3

- Slim and sleek design creates a sense of space
- Height 25 mm
- Lightweight with an acrylic coating
- Light resistant to prevent discolouring
- Light and easy to install by one person
- Universal installation: flush fitting, surface-mounted fitting, raised fitting
- CE certified and approved

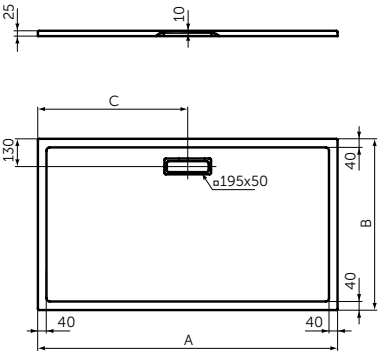

	A (mm)	B (mm)	C (mm)
T4483	1200	900	600
T4469	1200	800	600
T4476	1200	700	600
T4468	1000	800	500
T4475	1000	700	500
T4474	900	700	450

Low height makes it more accessible and also reduces the risk of tripping.

Height of 25mm (30% slimmer than any other floor-standing acrylic tray).

Detergent resistant to European Standard 14527.

Light resistant to prevent discolouring (EN ISO 4892).

WASTE WITH WASTE COVER, RECTANGULAR

MODEL	SKU
Silk Black	T4493V3

MODEL	SKU
Chrome	T4493AA

WASTE COVER, RECTANGULAR

MODEL	SKU
Silk Black	T4663V3

MODEL	SKU
Glossy White	T466301

MODEL	SKU
Silk White	T4663V1

MODEL	SKU
Chrome	T4663AA

Connect 2

MADE FOR EVERYDAY LIVING

These sleek, contemporary shower enclosures are designed to look and feel sensational. Made with the best, to give you the best, the Connect 2 collection is the perfect finishing touch to our range of showering products.

Quadrant

Corner Entry

Pivot

Slider

Saloon Doors

Wet Room Panel

Bath Screen

Ultra Flat New Shower Tray Silk White 120x90cm - T4483V1
UltraFlat New Waste Cover Silk Black - T4663V3
Connect 2 Slider Door 120cm - K9277V3
Connect 2 Side Panel 90cm - K9374V3
Ceratherm T25 Exposed Shower System - BC748XG

QUADRANT

MODEL	SKU
Quadrant 80x80	K9250V3
Quadrant 90x90	K9251V3
Quadrant 100x100	K9252V3

- Height 1950 mm
- Chrome plated metal handle double
- Smooth running wheels
- Easy click top caps
- Suitable for installation on a tray or wetroom floor
- Reversible for both left and right hand fitting

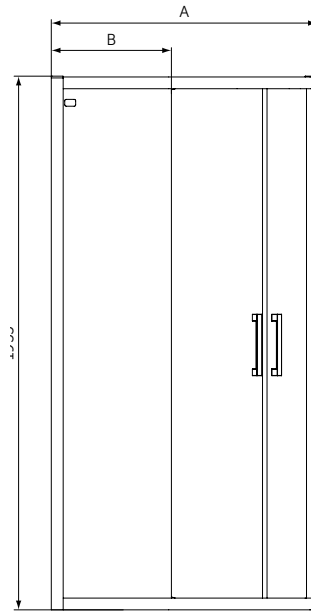

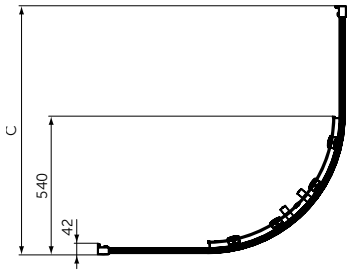

	A (mm)	B (mm)	C (mm)
K9250	770-795	195	770-795
K9251	870-895	295	870-895
K9252	970-995	395	970-995

CORNER ENTRY

MODEL	SKU
Unhand Door 80	K9259V3
Unhand Door 90	K9261V3
Unhand Door 100	K9262V3
Unhand Door 120	K9264V3

- Height 1950 mm
- Chrome plated metal handle double & knob
- Smooth running wheels
- Easy click top caps
- Suitable for installation on a tray or wetroom floor
- Reversible for both left and right hand fitting

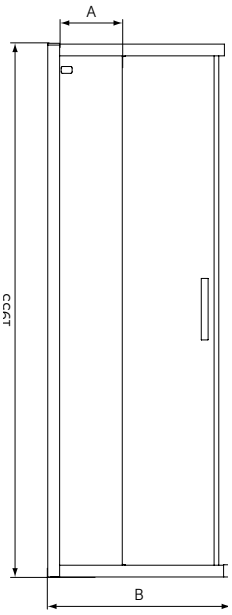

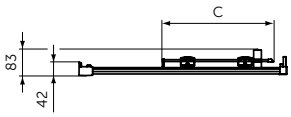

	A (mm)	B (mm)	C (mm)
K9259	280	770-820	410
K9261	420	870-920	460
K9262	420	970-1020	470
K9264	575	1170-1220	515

6mm Glass Thickness

Idealclean

Click and Clean

25mm Horizontal Adjustment

PIVOT

MODEL	SKU
Pivot Door 80	K9268V3
Pivot Door 90	K9270V3
Pivot Door 100	K9272V3

- Height 1950 mm
- Chrome plated metal handle double
- Easy click top caps
- Suitable for installation on a tray or wetroom floor
- Reversible for both left and right hand fitting

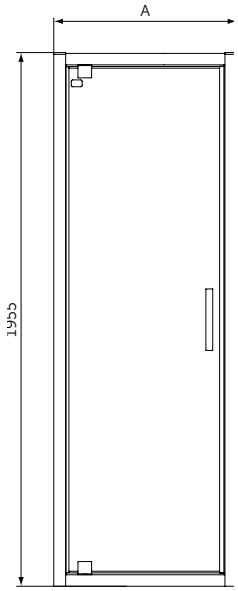

	A (mm)
K9268	770-820
K9270	870-920
K9272	970-1020

SLIDER

MODEL	SKU
Slider Door 100	K9273V3
Slider Door 105	K9274V3
Slider Door 110	K9275V3
Slider Door 120	K9277V3
Slider Door 140	K9278V3

- Height 1950 mm
- Chrome plated metal handle double
- Smooth running wheels
- Easy click top caps
- Suitable for installation on a tray or wetroom floor
- Reversible for both left and right hand fitting

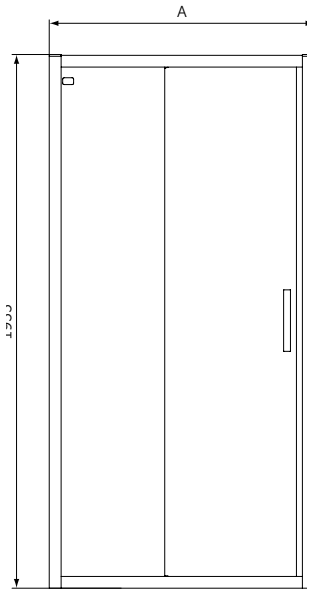

	A (mm)	B (mm)
K9273	970-1020	513
K9274	1020-1070	538
K9275	1070-1120	563
K9277	1170-1220	613
K9278	1370-1420	713

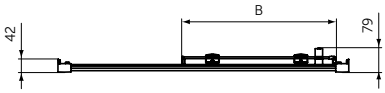

SLIDER

MODEL	SKU
Slider Door 160	K9282V3

- Height 1950 mm
- Chrome plated metal handle double
- Smooth running wheels
- Easy click top caps
- Suitable for installation on a tray or wetroom floor
- Reversible for both left and right hand fitting

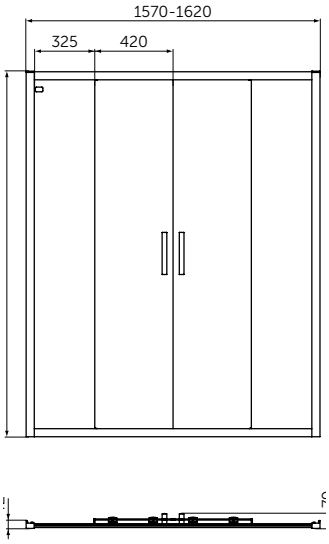

SALOON DOORS

MODEL	SKU
Saloon Door 90	K9294V3
Saloon Door 100	K9296V3

- Height 1950 mm
- Chrome plated metal handle double
- Easy click top caps
- Suitable for installation on a tray or wetroom floor
- Reversible for both left and right hand fitting

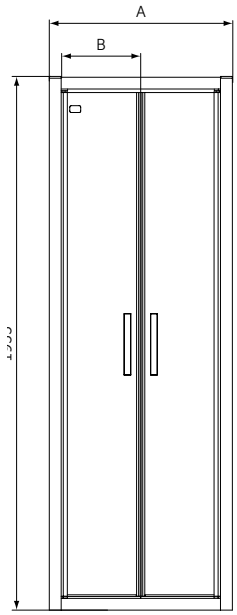

	A (mm)	B (mm)
K9294	870-920	390
K9296	970-1020	440

SIDE PANELS

MODEL	SKU
Side Panel 70	K9297V3
Side Panel 75	K9298V3
Side Panel 80	K9299V3
Side Panel 85	K9301V3
Side Panel 90	K9374V3

- Height 1950 mm
- Easy click top caps
- Suitable for installation on a tray or wetroom floor
- Reversible for both left and right hand fitting

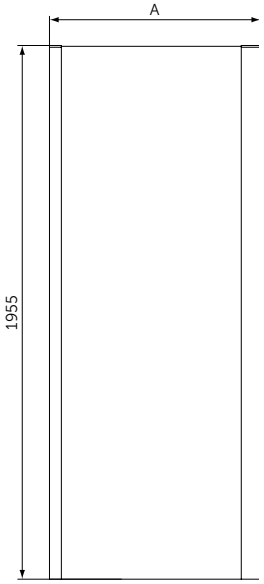

	A (mm)
K9297	670-720
K9298	720-770
K9299	770-820
K9301	820-870
K9374	870-920

WET ROOM PANELS

MODEL	SKU
Wet Room Panel 90	K9377V3
Wet Room Panel 100	K9378V3
Wet Room Panel 120	K9379V3
Wet Room Panel Fixation Wall	K9380V3
Wet Room Panel Fixation Angle	K9381V3

- Height 1950 mm
- Easy click top caps
- Reversible for both left and right hand fitting

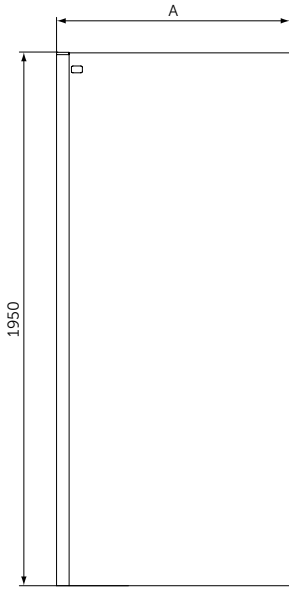

	A (mm)
K9377	854-877
K9378	954-977
K9379	1154-1177

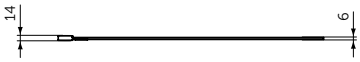

BATH SCREENS

MODEL	SKU
Bath Screen Curved Shape 800	T9924V3

- Height 1400mm
- Glass thickness 5mm
- Idealclean treatment
- Easy click top caps
- Horizontal adjustment up to 20mm per profile
- Reversible for both left and right hand fitting

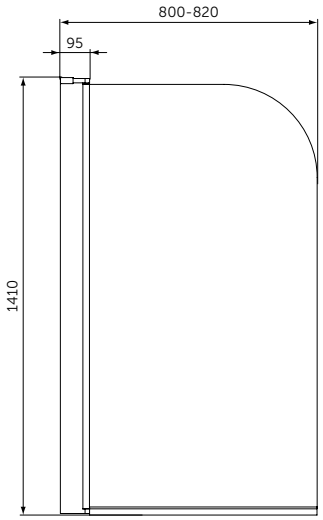

MODEL	SKU
Bath Screen Squared Shape 800	T9923V3

- Height 1400mm
- Glass thickness 5mm
- Idealclean treatment
- Easy click top caps
- Horizontal adjustment up to 20mm per profile
- Reversible for both left and right hand fitting

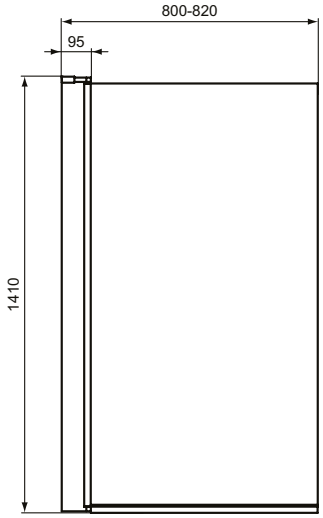

6mm Glass Thickness

Idealclean

25mm Horizontal Adjustment

CORNER INSTALLATIONS

Quadrant/offset quadrant
These curved enclosures suit almost any bathroom design, creating an open environment, even in restricted spaces.

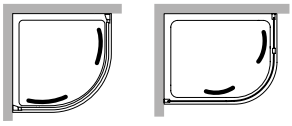

Sliding Door with side panel
Sliding doors offer maximum access where there is limited space to open a door. They can also work well in larger spaces to create luxurious showering areas.

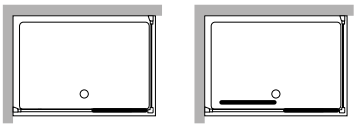

Corner entry
When space is limited on either side of a shower enclosure a corner entry with sliding doors offers an effective solution.

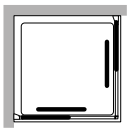

Pivot door with side panel
These doors swing open to offer wide access, which when combined with a side panel creates a light and airy showering area.

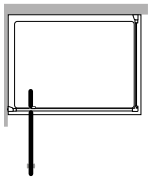

Saloon door with side panel
The perfect solution in areas where the large swing of a single door might prove awkward or impossible. Comprising two glass panels, each pivot separately and at opposite sides. This of course reduces the swing of each door into the area in front of the shower enclosure.

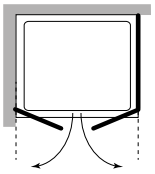

ALCOVE INSTALLATIONS

Sliding door
Sliding doors are a practical solution for alcoves, especially larger spaces. The door glides on smooth running wheels for access.

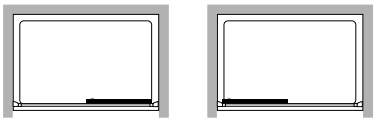

Pivot door
These doors work well in alcoves allowing the maximum showering area combined with the maximum access.

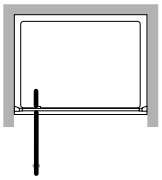

Saloon door
Using a saloon style door configuration can enable you to install a wider shower enclosure as the doors present a comparatively small external obstacle.

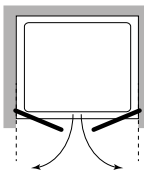

Kitchen Taps

COMFORT AND ELEGANCE

The modern kitchen is all about combining smart technologies with stunning designs. Ceralook and Cerafine O mixers provide both – dressed in silk black they create an air of luxury while delivering the outstanding performance kitchens require. Both are fitted with our innovative FirmaFlow® cartridge which not only helps saving water and energy but also lasts almost twice as long as the industry standard. Ceralook is equipped with BlueStart® technology which facilitates energy savings of up to 50%.
Comfort and ergonomics are key for kitchen products. That is why Ceralook and Cerafine O offer effortless ease of operation around the kitchen sink.

Ceralook Kitchen Sink Mixer - BC174XG

CERALOOK KITCHEN SINK MIXER

MODEL	SKU
Sink Mixer With Tubular Spout	BC174XG

- Brass body with L tubular spout
- 38 mm FirmaFlow® cartridge
- Hot water temperature control
- Click technology
- BlueStart® technology
- Best comfort zone
- Metal handle with red and blue color indication - printed on handle
- Hidden aerator
- EasyFix with centering & sealing ring
- With shaft screw connection
- Flexible hoses G3/8" for water supply system connection

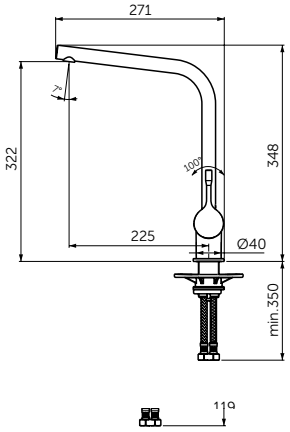

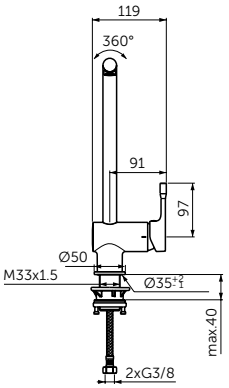

CERAFINE O KITCHEN SINK MIXER

MODEL	SKU
Sink Mixer With High Tubular Spout	BC501XG

- High attached tubular spout rotating on 360°
- 28 mm FirmaFlow® cartridge
- Hot water temperature control
- Comfort zone
- Metal handle with red and blue color indication - printed on handle
- Aerator Perlator
- EasyFix with centering & sealing ring
- With shaft screw connection
- Flexible hoses G3/8" for water supply system connection

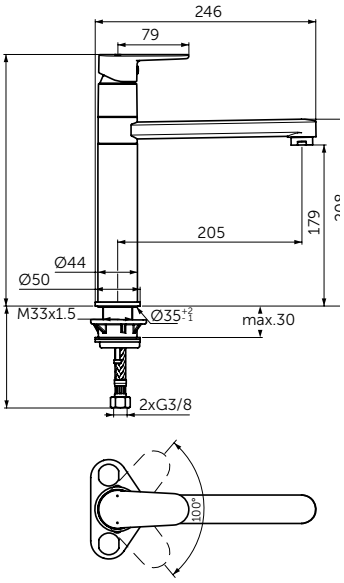

Easy Fix | Blue Start | Click Technology | Water Saving | Comfort Height | Temperature Limit Stop

CLASSICALLY CONTEMPORARY, OUR SILK BLACK COLLECTIONS OFFER YOU A CONTRAST FROM THE CONVENTIONAL GIVING YOU A SOPHISTICATED LOOK THAT YOU'LL LOVE SEEING DAY AFTER DAY. EFFORTLESSLY STYLISH, THIS SLEEK FINISH WILL ADD A SPECIAL TOUCH TO ANY ROOM.

Visit our website to discover more matching collections that will help you in bringing your design vision to life.

www.idealstandardgulf.com

Together we positively impact the future of modern living. Together we think bigger. Together we establish the rules for considered design. Together we bring emotion to functional perfection. Together we form enduring partnerships. Together we meet the needs of all generations. Together we shape the future or the category we have defined.

Together for better.

Ideal Standard

IDEAL STANDARD GULF FZCO

idealstandardgulf@idealstandard.com | +971 4 804 2400
P.O. Box 261559 - Dubai, UAE

Ideal Standard Design Bathroom Centre Dubai | + 971 4 309 6000

www.idealstandardgulf.com

Part of:
Ideal Standard International Group
Belgium

Ideal Standard

Ideal Standard follows a policy of continuous and consistent improvement on the design and functionality of the products. Thus, it reserves the right to change its manufacturing prescription at any time and discontinue or withdrawany product during the year of validity of this catalogue, without any prior notice.